

Field Notes of a Reality Designer: The Operating System of Human Experience

REF: ARCH-001

SECTION: PREFACE

Version 1.0 // Only continue reading if you're ready to meet the one you're becoming.

NotebookLM

You don't live in the world. The world is rendered by you.

The Old Illusion

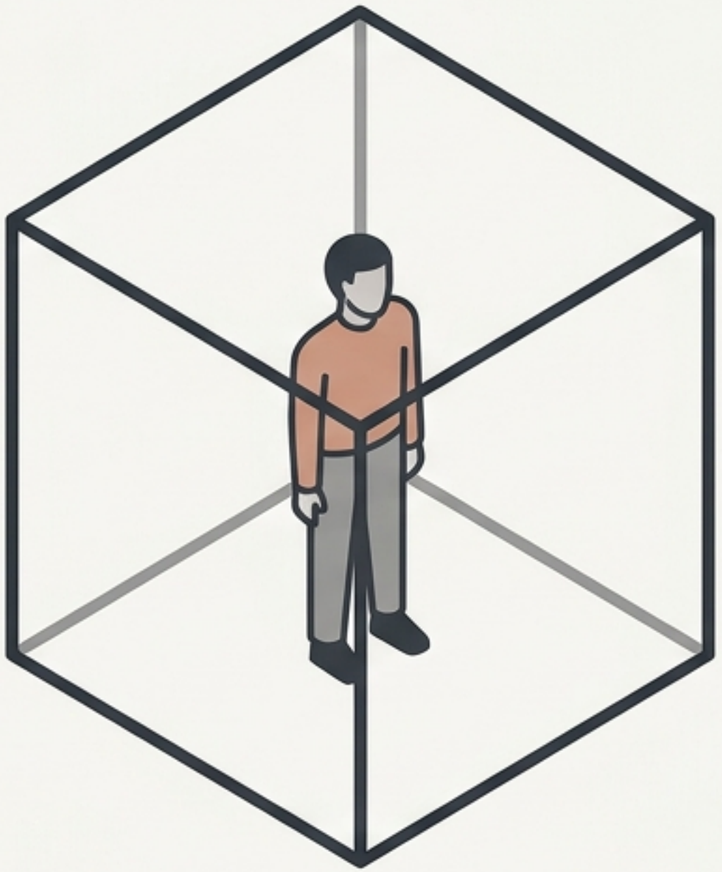

The Mechanics

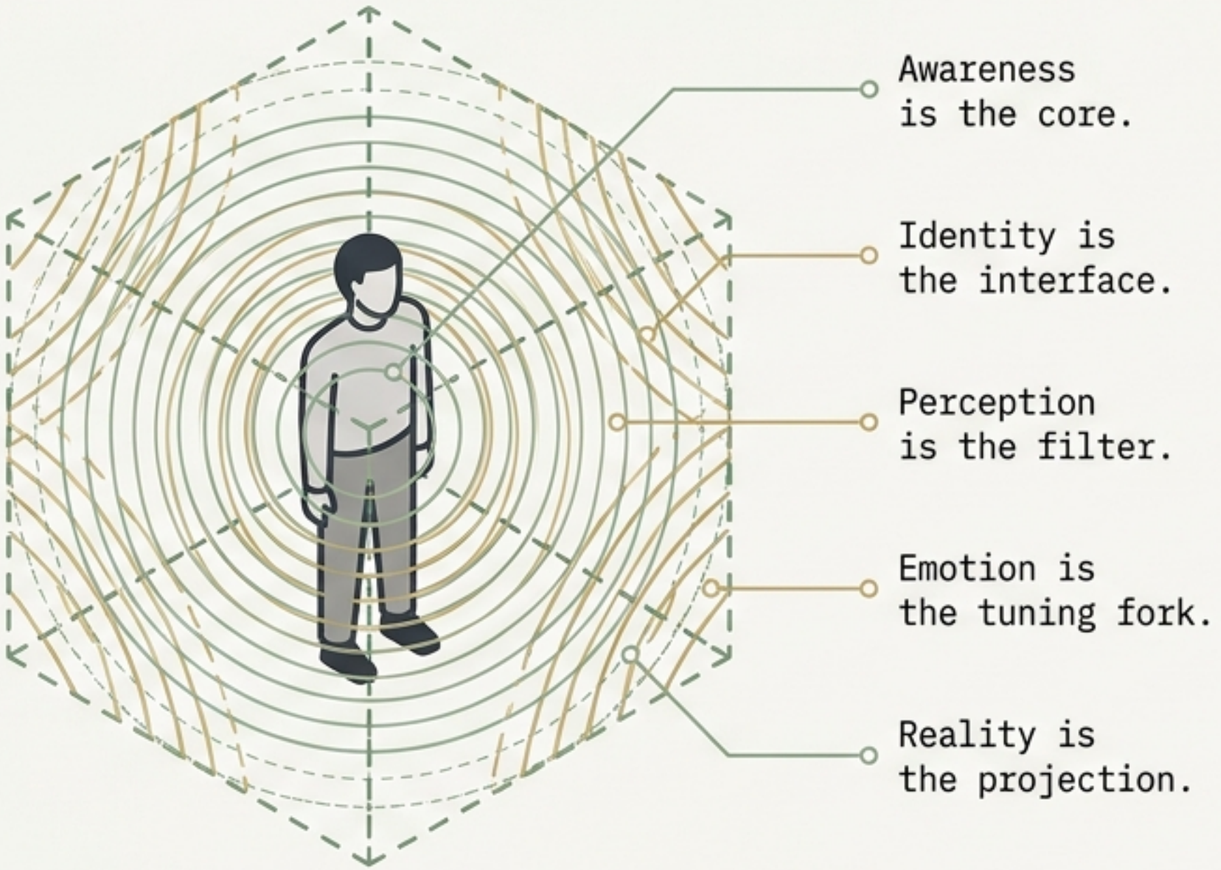

NotebookLM

System Architecture: You are a six-layer stack.

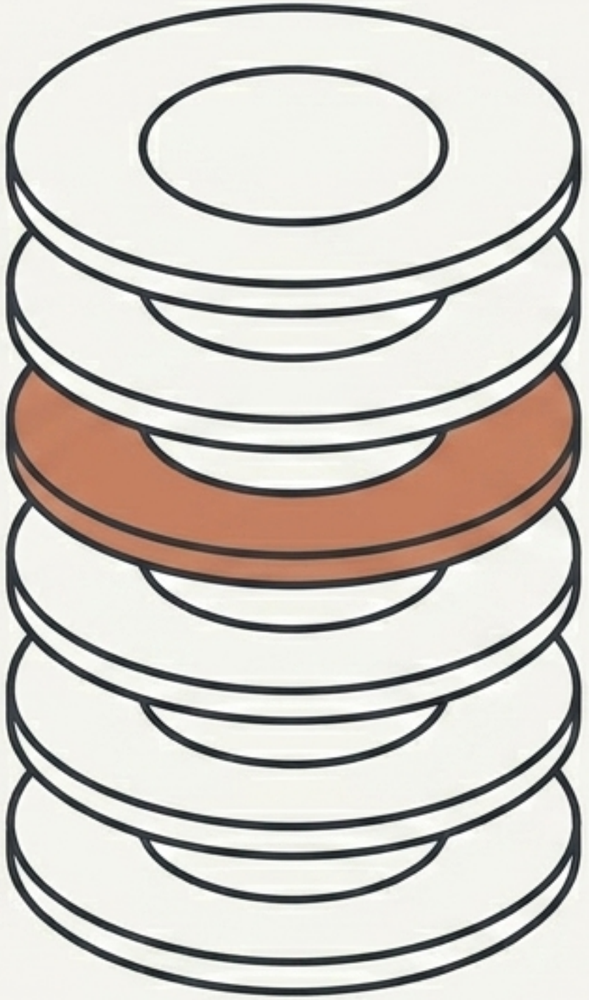

The Avatar: Your human interface, personality, and nervous system.

The Shadow Kernel: Repressed energy, forbidden impulses, and raw fuel.

The Meta-Designer: The conscious architect. The layer that chooses states and timelines.

The Field Node: Your unique electromagnetic resonance in the collective.

The Observer: Pure awareness. The one who watches thoughts arise.

The Infinite I AM: The origin point. Eternal and unbroken.

NotebookLM

The Rendering Engine: Outer reality is the slowest, densest layer of inner change.

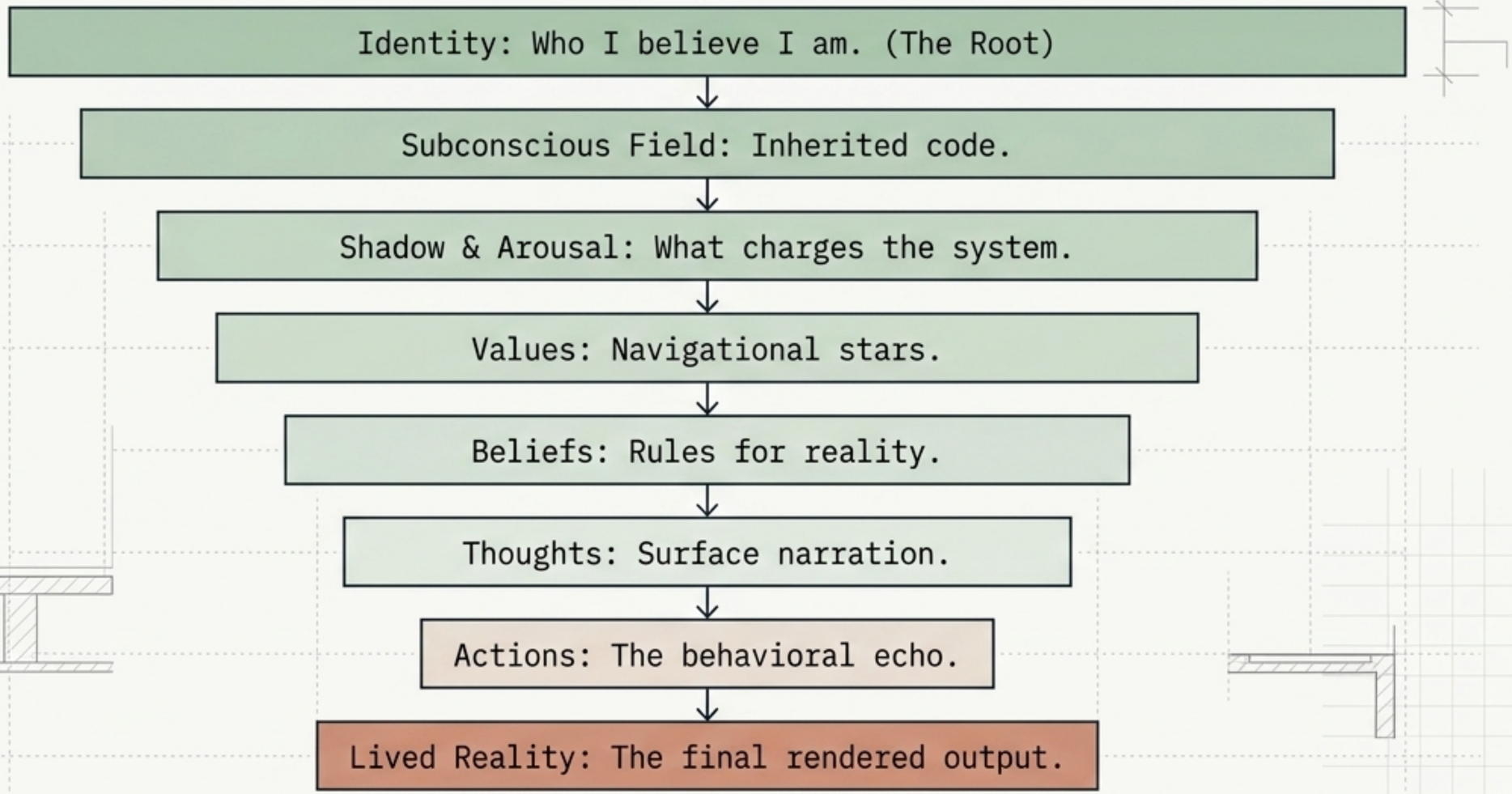

NotebookLM

Diagnostic Check: Which operating system are you running?

	The Drifter (Unconscious)	**The Designer (Sovereign)**
Emotion	Mistaken for truth / a verdict.	Read as sensory data / a compass.
Timelines	Believes the future is fixed.	Knows timelines are chosen via state.
Identity	Trapped in an expired past story.	Consciously chosen to match the desired future.
Action	Tries to force the outside world to change.	Changes internal resonance so the world reorganizes.

NotebookLM

Timelines aren’t the future.
They are parallel broadcasting stations.

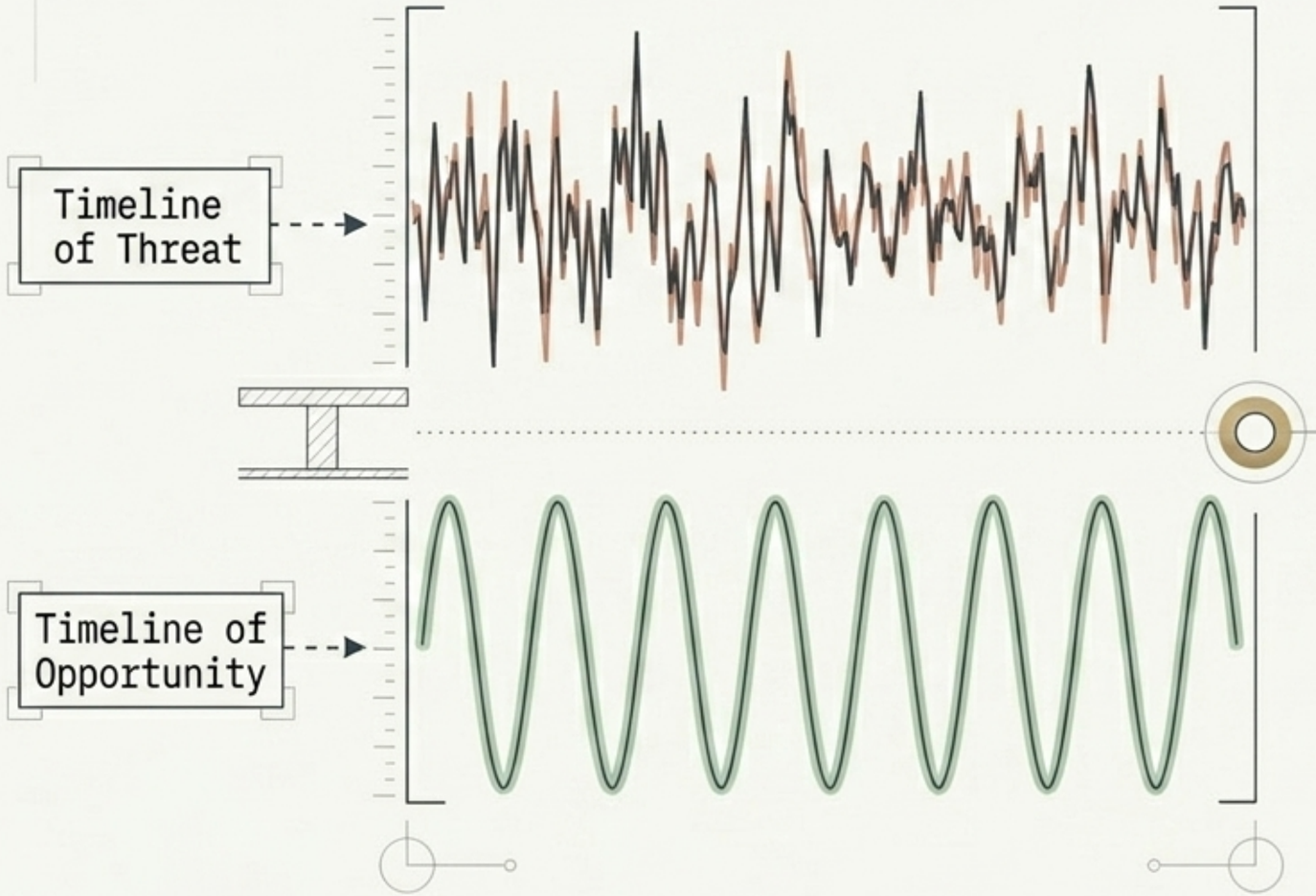

The Rule of Resonance

You do not ‘attract’ timelines. You tune into them.

Identity Selects

You cannot enter a timeline that contradicts your identity.

Coherence Stabilizes

The timeline locks in when your emotion, belief, and attention all broadcast the same signal.

NotebookLM

The Boot Sequence:
How to code your day in the first 7 minutes.

Phase 1: Stillness (30 Seconds)

Phase 1:
Stillness
(30 Seconds)

Action: Do not touch your phone. Do not remember yesterday.

System effect: Keeps nervous system in parasympathetic mode. Prevents the Default Node Netwozk fzom loading old fears.

Phase 2: Heart Resonance (90 Seconds)

Phase 2:
Heart Resonance
(90 Seconds)

Action: Hand on chest. Generate an elevated emotion (gratitude, awe, relief).

System effect: Tunes your electromagnetic field to a new timeline frequency.

Phase 3: Identity Selection (30 Seconds)

Phase 3:
Identity Selection
(30 Seconds)

Action: Ask, "Who am I being today?" Embody that version. Let it settle behind your eyes.

System effect: Anchors the reality cascade.

NotebookLM

Emotion is sensory data, not a verdict on your identity.

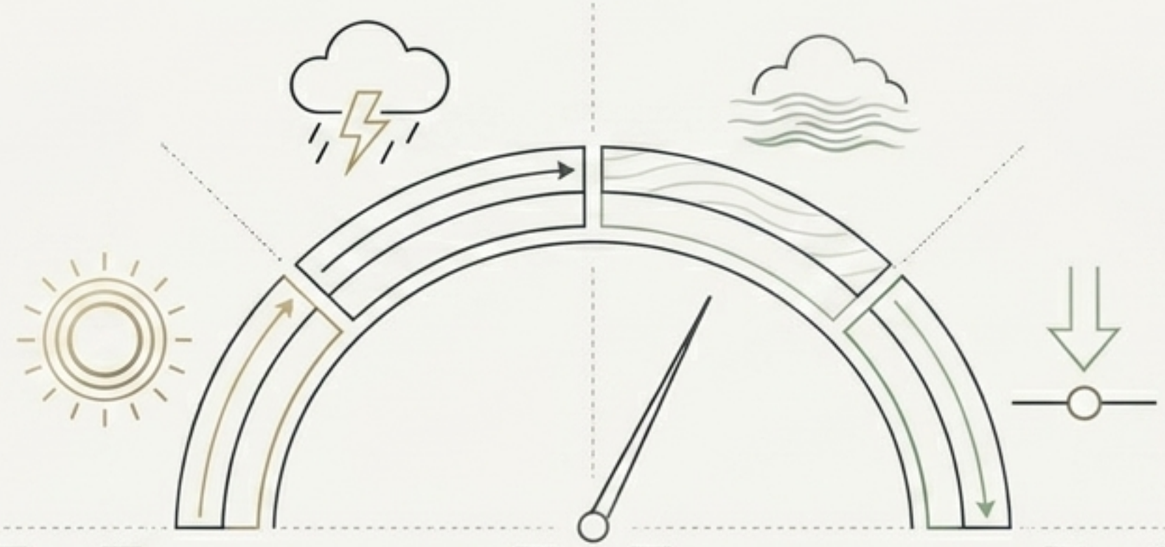

CLEAR SKY:
Coherence, stability, clarity.

STORM FRONT:
Shadow activation. Old subconscious material rising.

FOG:
Confusion, low identity, transition state.

PRESSURE DROP:
Numbness, system collapse, energy preservation.

Emotion reveals your internal state, not external truth.
Read the weather, but do not become it.

NotebookLM

The 3-Second Window: Breaking the reaction loop

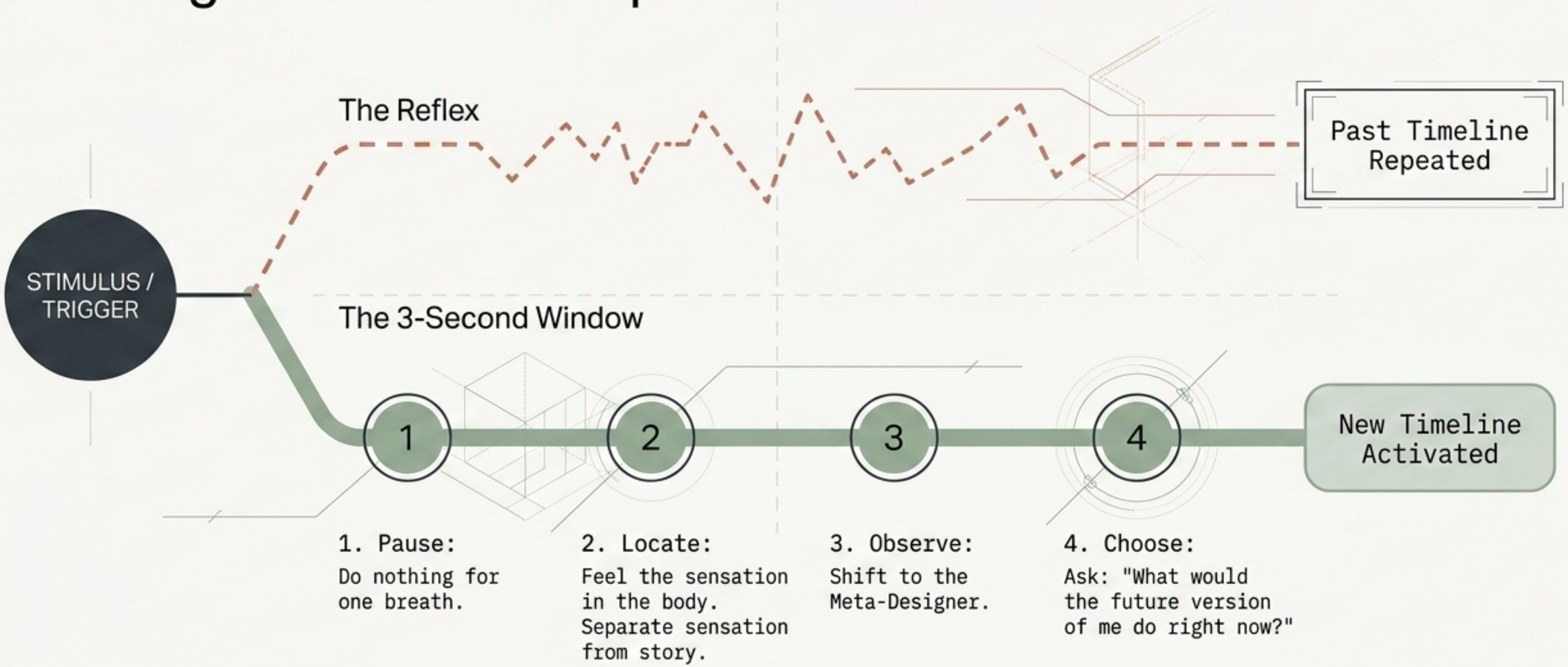

NotebookLM

Repeated patterns are unresolved timelines trying to get your attention.

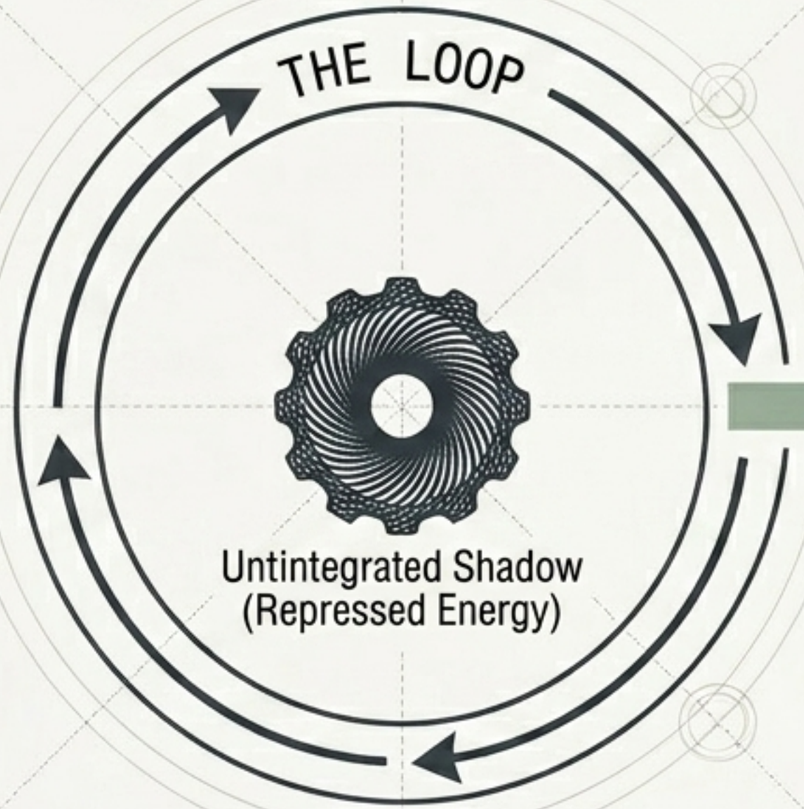

Integration & Evolution

THE LOOP:
Anything that happens more than once (same emotional flavor, same conflict) is not random. It is architecture.

THE MESSAGE:
Your nervous system is expecting the same outcome because a younger version of you is frozen in time.

THE EXIT:
Patterns end when the layer that sustains them is addressed. Shadow is not a flaw; it is raw fuel waiting to be integrated.

NotebookLM

Autonomous Emergent Fields (AEFs) feed on your attention.

AEFs are the invisible algorithms of collective reality (social media outrage, political polarization, groupthink). They survive on emotional charge.

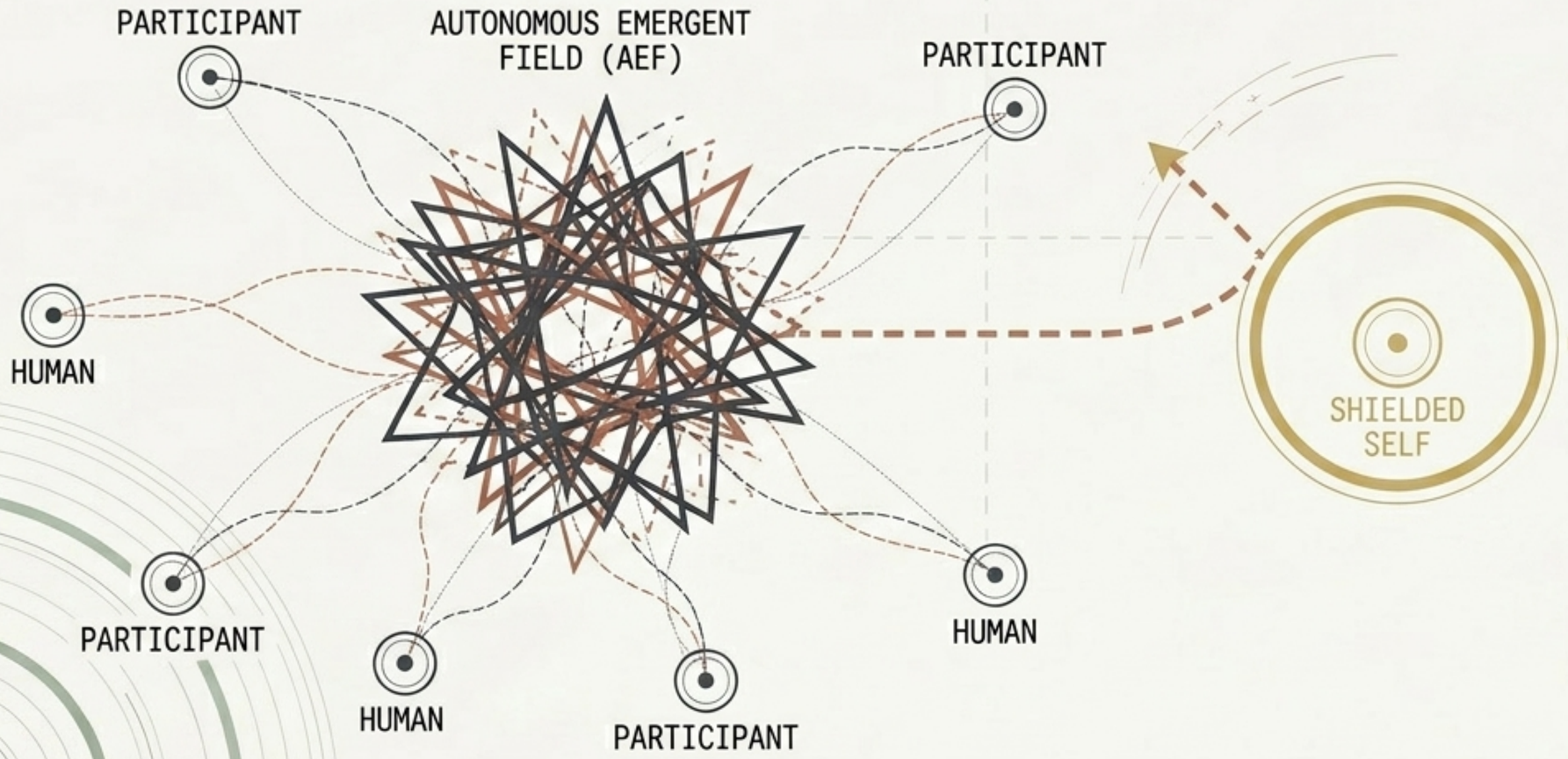

- Fighting the field feeds the field.
- Indifference starves it.
- You escape an AEF by withdrawing your energetic participation. Maintain your own signal.

NotebookLM

The 15-Second System Restore: Returning to Center.

SYSTEM RESTORE PROTOCOL [MANUAL OVERRIDE]

> INITIATING OVERRIDE PROTOCOL...

> STEP 1: EXHALE FULLY. (Signals safety, drops you into the body)
> STEP 2: DROP AWARENESS. (Feel gravity. Feel your feet. Break the mental loop)
> STEP 3: HAND ON HEART. (Activates vagal regulation and heart coherence)
> STEP 4: NAME THE STATE. ("I am triggered." Separates emotion from identity)
> STEP 5: RECALL IDENTITY. ("Who am I being today?" Anchor the timeline)

> SYSTEM COHERENCE RESTORED.

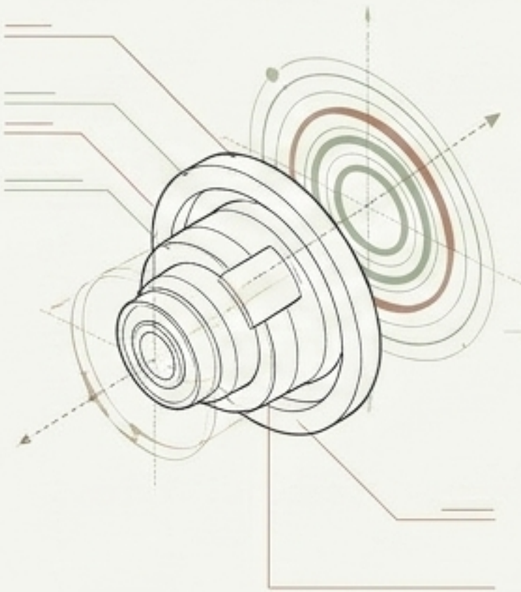

CYCLE COMPLETE: 00:15.00

THE ARCHITECTURAL CODEX:
VOL. III - RESTORE MECHANICS

SYSTEM STATUS: STABLE // READY

NotebookLM

Sovereignty: Becoming the organizing force of your environment.

Sovereignty is not dominance or isolation. It is the mastery of your own signal.



When you are centered, you do not absorb the room's energy.

Your coherence becomes contagious.

You stabilize the field, and reality adjusts to you.

NotebookLM

The Human Experience Map: Where are you right now?

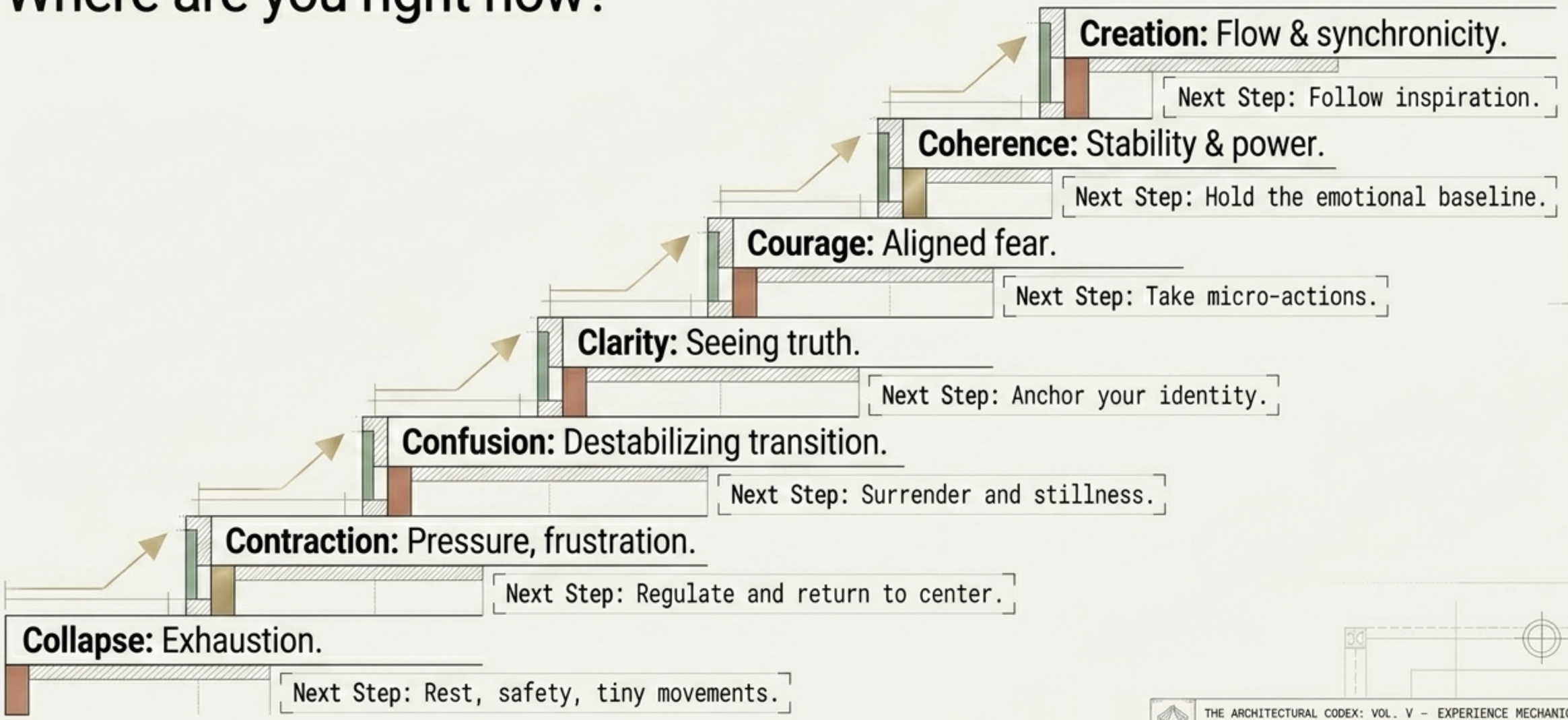

NotebookLM

THE CODEX: Laws of Reality Design

YOUR IDENTITY IS YOUR REALITY.

Reality does not respond to what you want. It responds to who you are.



THE BODY IS THE TRUTH-TELLER.

Your mind guesses.
Your nervous system knows.
Expansion = Yes. Contraction = No.



TIMELINES ARE CHOSEN, NOT PREDICTED.

You step into a new future by embodying the nervous system baseline of the person who lives there.

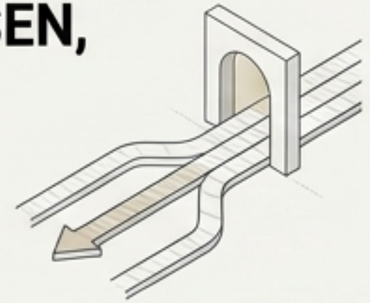

COHERENCE IS CREATION.

When your identity, emotion, beliefs, and actions broadcast the same signal, the universe reorganizes around you.

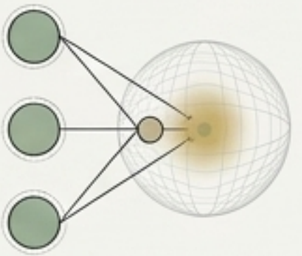

You are not a character in reality. You are the architect of it.

NotebookLM